CURRENT TRANSFORMER
AC/DC TRMS - RS485 MODBUS

QI-300-V-485

MADE IN ITALY CE UK CA

POWER SUPPLY	12...30 Vdc, protection against polarity reversal and overtemperature
ABSORPTION	Max 20 mA
TYPE OF MEASURE	**RMS (monopolar) or DC**
RANGE	**300 A AC/DC,** bipolar for DC measurement, RS485 customize setting
ACCURACY	**0,5% F.S.**
RISOLUTION	12 bit
OUTPUT	**0...10V and RS485**
CREST FACTOR	1,4
HYSTERESIS	0,2 F.S.
BAND WIDTH	at -3 dB DC or 20…2000 Hz
RESPONSE TIME	1000 ms on analog output, 30 ms on serial output
OVERLOAD	2 kA pulse, 300 A continuous
STANDARDS CE	EN61000-6-4/2006 + A1 2011; EN64000-6-2/2005 ; EN61010-1/2010
ISOLATION	3 kV son bare wire
PROTECTION INDEX	IP20
TEMPERATURE COEFFICIENT	< 200 ppm/°C
WORKING TEMPERATURE	-15...+65°C
STORAGE TEMPERATURE	-40°C... +85°C
HUMIDITY	10...90% not condensing
ALTITUDE	up to 2000 m s.l.m.
DIMENSIONS	89,1 x 99,25 x 28,5 mm (terminal excluded)
TERMINALS	Removable terminals 3,5 mm, 5 poles
WEIGHT	370 g
FILLING	Epoxy resins
BOX MATERIAL	PBT, grey
LED	N°1 yellow, power on fixed, data communication blinking
DIP-SWITCH	8 poles
MOUNTING	Screw predisposition for vertical/horizontal mounting, DIN rail clips (included) for vertical/horizontal mounting

The QI-300-V-485 is a AC/DC **current transformer**, galvanically isolated from the measuring circuit. The device is in the function and appearance is very similar to a standard active TA, however, able to measure the DC component and AC **RMS**. The transformer is equipped with **RS485 Modbus serial output and an analog output 0-10V**. Through the serial port can be configured freely span and zero and assign the Modbus address.

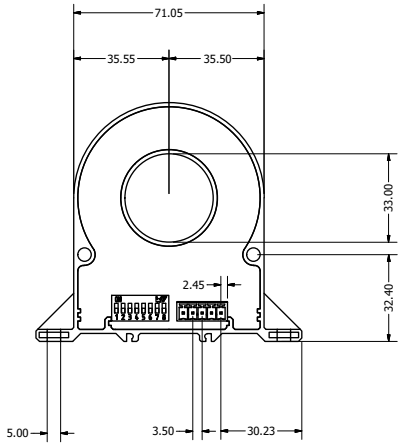

The images/schemes proposed are to be considered indicative and not binding

LEGEND OF SYMBOL ONTO PAD PRINTING	
⚠	General warning
P1	Insertion of the cable

ISOLATION AND CONNECTIONS

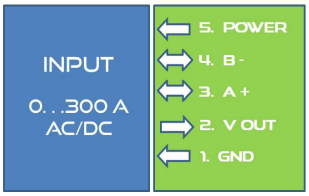

Monopolar Measurement

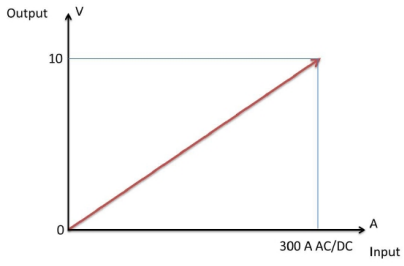

Bipolar Measurement

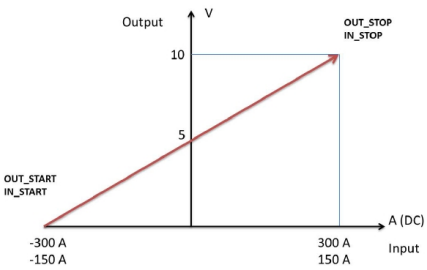

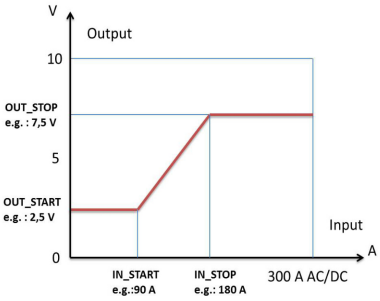

QI-300-V-485
CURRENT TRANSFORMER
AC/DC TRMS - RS485 MODBUS

INSTRUCTION MANUAL QI-300-V-485

REMARKS:

- Modbus connections: A+ and B- as per Modbus RTU standards;
- Modbus Register reference: with reference to the logical address, for ex. 40010, corresponds to physical address n°9 as per Modbus RTU standard;
- Dip Switch Settings: the setting is not enabled if the first fourth dip-switches are set to 0000, the rest of dip-switch are disabled. All settings coming from EEPROM;
- Modbus functions supported: 3 (Read multiple registers, max 4), 6 (Write single);
- **BY FACILE SOFTWARE OR BY SETTING VIA MODBUS, YOU CAN MEASURE DC CURRENT EQUAL OR OVER 400 A (only on RS485).**

Modbus Register Table:

ADDRESS LIST BASE 1 (40001)
MICROPROCESSOR'S REGISTERS BASE 0 (0000)
EXAMPLE _ to read register 40003
(address device = 1)
Tx: <01> <03> <00> <02> <00> <01> <25> <CA>

Register Name	Comment	Register Type	R/W	Default Value	Range	Modbus Address
Machine_ID	ID Machine	Unsigned 16 bits	R	16		40001
FW_Version	Firmware Release	Unsigned 16 bits	R			40002
Addr	Modbus Address	Unsigned 16 bits	R/W	1	1…250	40003
Delay	Answer Delay	Unsigned 16 bits	R/W	1	1…1000	40004
Baudrate	Baudrate 0=1200 /1= 2400 2= 4800 / 3= 9600 4= 19200 / 5= 38400 6= 57600 / 7= 115200	Unsigned 16 bits	R/W	1	7	40005
Parity	Type of parity 0= 8,N,1 1= 8, O, 1(ODD) 2= 8, E, 1 (EVEN)	Unsigned 16 bits	R/W	0	0…2	40006
In_start	Start input (A)	Floating 32 bits	R/W	0		40007 (LO) 40008 (HI)
In_stop	Stop input (A)	Floating 32 bits	R/W	300 AC/DC		40009 (LO) 40010 (HI)
Out_start_V	Start Output (mV)	Unsigned 16 bits	R/W	0	0…10000	40011
Out_stop_V	Stop Output (mV)	Unsigned 16 bits	R/W	10000	0…10000	40012
Filt 1	N° of samples for mobile average (1=100 ms)	Unsigned 16 bits	R/W	1	132	40013
Filt	Second level filter for ripple problems on AC measurement	Unsigned 16 bits	R/W	4096	1000… 20000	40014
Cut off	Cutt off value (mA)	Unsigned 16 bits	R/W	1500		40029
RMS_A	RMS Current Value (A)	Floating 32 bits	R			40037 (LO) 40038 (HI)
Command	Flash settingsave command: 0xC1C0 Dip read command: 0xD166 Reboot command: 0xC1A0	Unsigned short	R/W			40040
Status	Status Register bit0 =1: Error flash settings bit1=1:Error flash calibration bit2=1: Over Range bit3=1: Under Range		R			40048 40051 (HI) 40052 (LO) 40053 (LO) 40054 (HI)
RMS_100	RMS Value of Current (A x 100)	Signed 16 bits	R			40050
RMS_sw	RMS Current Value (A) swapped	Floating 32 bits	R			40051 (LO) 40052 (HI)
Ah	Ah counting (resettable)	Floating 32 bits	R/W			40053 (LO) 40054 (HI)
A_MAX	Max currentvalue/100 (resettable)	Signed 16 bits	R/W			40055
A_min	min currentvalue/100 (resettable)	Signed 16 bits	R/W			40056
Data High	Calibration Data (yy, mm)	Unsigned 16 bits	R			40057
Data Medium	Calibration Data(day, hour)	Unsigned 16 bits	R			40058
Data Low	Calibration Data(min, sec)	Unsigned 16 bits	R			40059

The protection offered by the device can be compromised in the case that it isn't used in accordance with the instructions.

Via the serial link RS485-USB you can connect to the QI-300-V-485 via the interface program FACILE QI-50-V-485. Using this software, free download from www.qeed.it, allows you to configure the processor by setting the START and STOP input and output (see diagram), you can set the Modbus address of the PC to which the query transformer and decide whether to make monopolar (only positive or negative values) or bipolar (see diagram).
If you are using bipolar function on AC current, the value read will be 0 A (5 V) because you are reading the average value. By means of dip-switch can configure the QI-300-V-485 to set the scale to 150 or 300A, the function monopolar (RMS) or bipolar (mean value), the Modbus address (see register map below) up to a maximum of 15 addresses.

MOUNTING: The current transformer QI can be mounted in any position (see photo below), horizontal or vertical mounting, horizontal or vertical through the two hooks for DIN rail included in the box.

CAUTION: Magnetic fields of high intensity can vary the values measured by the transformer. Avoid installation near permanent magnets, electromagnets or iron masses that induce strong changes in the magnetic field. If any irregularity recommend reorient or move the transformer in the area most appropriate.

DIN rail mounting:

Dip-switc Table:

DESCRIPTION	DIP 1	DIP 2	DIP 3	DIP 4	DIP 5	DIP 6	DIP 7	DIP 8
All settings from EEPROM	0	0	0	0				
ADD = 1	0	0	0	1				
ADD = 2	0	0	1	0				
ADD = 15	1	1	1	1				
BAUDRATE - 2400					0	0		
BAUDRATE - 9600					0	1		
BAUDRATE - 38400					1	0		
BAUDRATE - 57800					1	1		
MONOPOLAR (TRMS)							0	
BIPOLAR (MEAN VALUE)							1	
300 A AC/DC								0
150 A AC/DC								1

Dip-Switch Settings:

Example: if you want to set the measure range from 0...300 A AC/DC to 0... 150A AC/DC, please, put ON the dip-switch n°8 and put ON also one of the first four dip-switch (if you don't do that it continue to take the EEPROM setting).

If you want to modify from Monopolar (default) to Bipolar function by dip-switch, please, put ON the dip n°7 and put ON also one of the first dip-switch (if you don't do that it continue to take the EEPROM setting).

Any changes made by dip-switch required to switch off the power supply. It's a safety condition in order to prevent any manumission on the device.